SCARAB
FAYAT GROUP

M25H

Trailed, robust, steel suction nozzle for durability. Complete with trailed side brush, widesweep brush and optional front brush assemblies all fitted with water nozzles for dust suppresion.

The hopper and internal screens are completely manufactured from abrasion resisting Stainless Steel.

Hydraulic system makes extensive use of steel piping to minimise the use of flexible hoses.

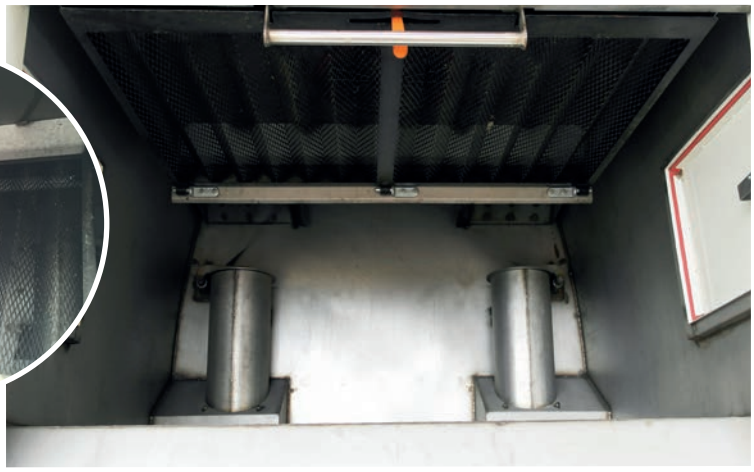

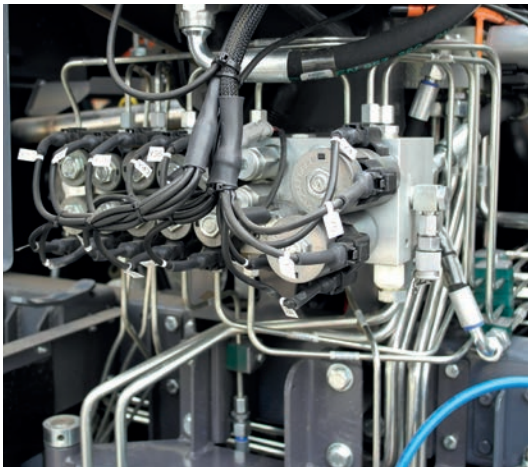

Powerful & Reliable Suction Performance

A stainless steel 800mm impellor positioned to produce an efficient airflow path for high suction performance and reduced power consumption.

Particulate screening via a hinged, stainless steel mesh filter, pleated to give maximum surface area and reduce blocking. Fan chamber is easily accessed for cleaning.

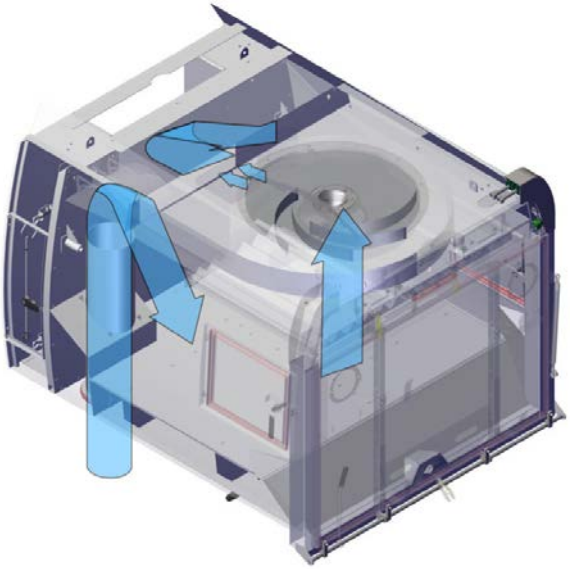

All Day Comfort

The spacious sound proofed cab has great visibility and has been ergonomically designed, all sweeper functions are within easy reach, and with multiple storage areas, cup holders and the fully adjustable high backed seats with headrests will mean you will be able to work all day in comfort.

The M25H
A FULL SIZE SWEEPER IN A COMPACT PACKAGE

The Scarab M25H with its unique brush configuration and powerful suction performance combined with its large hopper and water capacity go towards making it the most versatile small truckmount sweeper in the world. The custom built chassis allows for both a smooth ride and a tight turning circle and with its long-range 65kph top speed, allows the M25H to be tasked at not only sweeping in congested city centres but also allows the vehicle to travel and sweep in remote locations.

Engine & Transmission
The low-emission Stage IIIB turbo charged Deutz power unit provides ample power at low revolutions and its position, set low in the chassis, enhances vehicle stability. Access to all engine filters and service points is afforded by means of the tilting cab and raising the hopper.

The Scarab fluid drive system is directly coupled to the engine to provide power to the transmission and all hydraulic services. It ensures smooth and infinitely controllable drive characteristics in both sweep and travel modes as well as a quiet and efficient sweeping and suction performance.

Permanent clutch-free, single-pedal control.
Custom Chassis with a tight turning circle.
Efficient sweeping and suction performance.

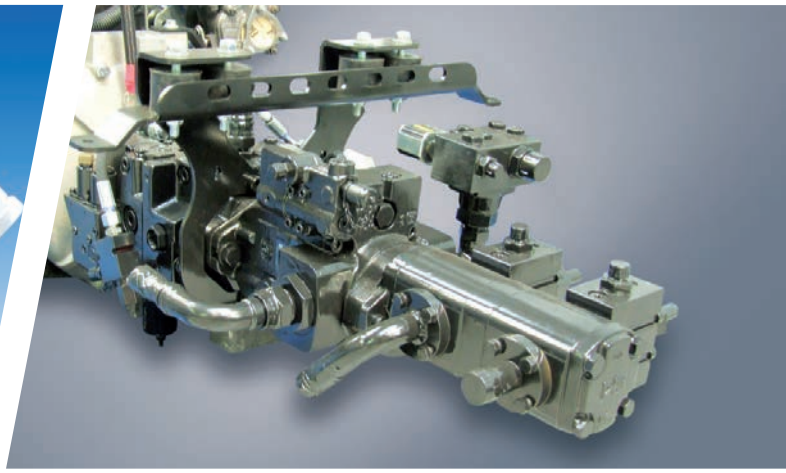

Command & Control

Scarab's CANbus control system has revolutionised the way sweepers are operated and maintained. Intuitive controls and a conveniently positioned colour monitor in the roofline provide comprehensive levels of feedback to both operating and service personnel. A graphical display indicates the sweeping configuration and conditions of the vehicle systems including warnings and regular service reminders. Real-time monitoring and data-logging provides valuable assistance in resolving problems and achieving optimum machine performance. Scarab CANbus includes universal connectors for fitment of Global positioning System (GPS) and the option of real-time data via telematic up-link.

SCARAB
FAYAT GROUP

SCARAB SWEEPERS LTD
Pattenden Lane
Marden, Tonbridge
Kent, U.K
TN12 9QD

T +44 (0) 1622 831006
F +44 (0) 1622 832417

www.scarab-sweepers.com

Dealerstamp